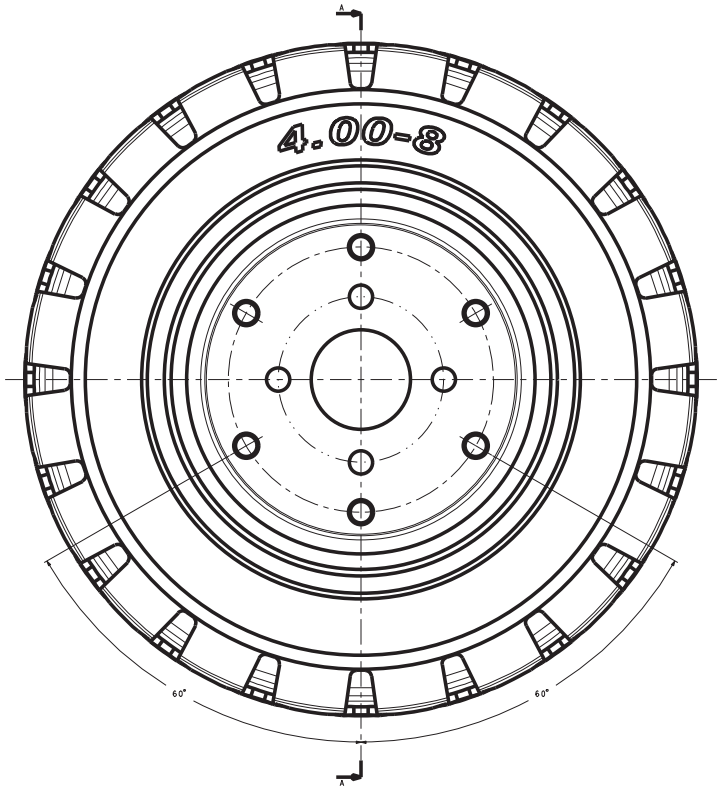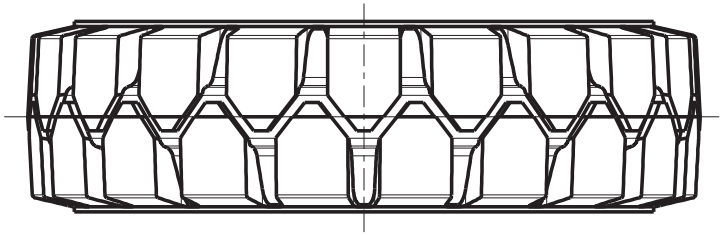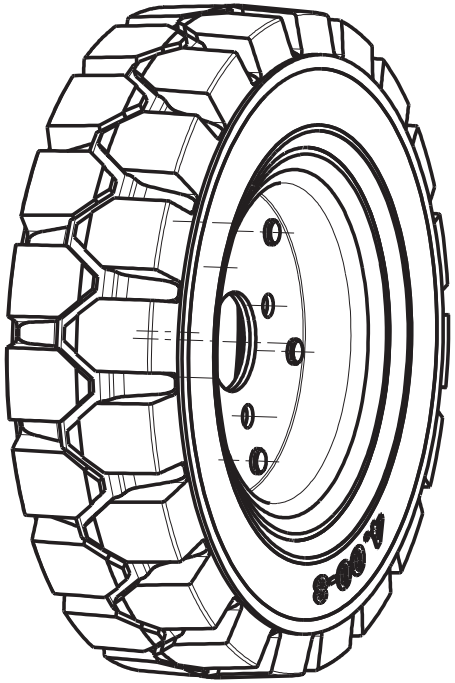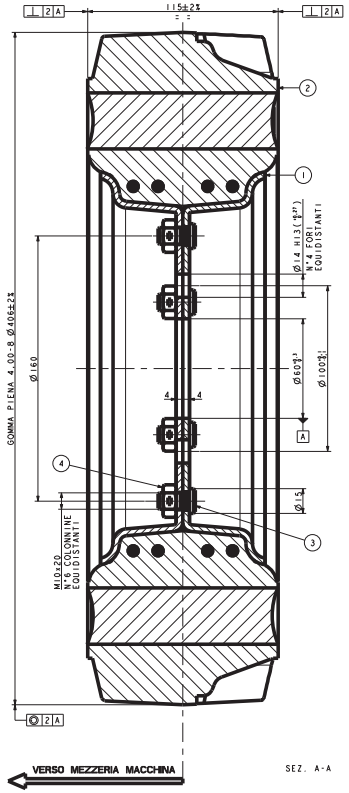Full rubber wheel 406 x 115 mm